Diary system

Morning me Plan:

Time Blcoking:

Review at night :

Benefit

Mind clear hota hai,Focus badta,Time waste nahi hota,Disciple devlop hota hai?

ABCDE TIME MANAGEMENT TECHNIQUE

A	VERY IMPORTANT TASK
B	IMPORTANT BUT NOT URGENT
C	NICE TO DO
D	DELEGATE
E	ELIMINATE(WASTE OF TIME)

1-APNE SAARE TASK DIARY NOTE KAR LO

2-HAR TASKE KO ADCDE LABEL DO

3-SABSE PAHLE A CATEGORY TASK KO KARNA

4. B AUR C CATEGORY WALI TASK KO KARNA HAI

5 D DELEGATE KARO

7 ELIMANTE

4-P TIME MANAGEMENT TECHNIQUE

P-PRIORITIZE	SABSE IMPORTANT TASK CHOOSE KARO
P-PLAN	SABSE IMPORTANT TASK CHOOSE KARO
P-PERFORM	SABSE IMPORTANT TASK CHOOSE KARO
P-PERFECT	SABSE IMPORTANT TASK CHOOSE KARO

MOONSHOT PLANING TECHANIQUE

40% Techanical + **60%(Communication+Networking +Good nature+Relations)**

Production me error aayengi

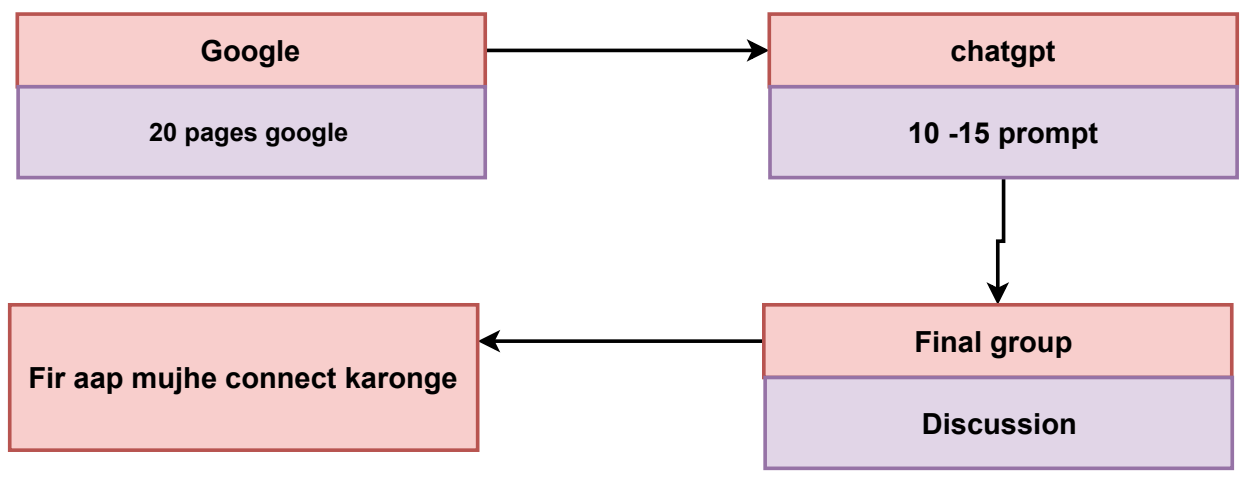

Prompt engineering

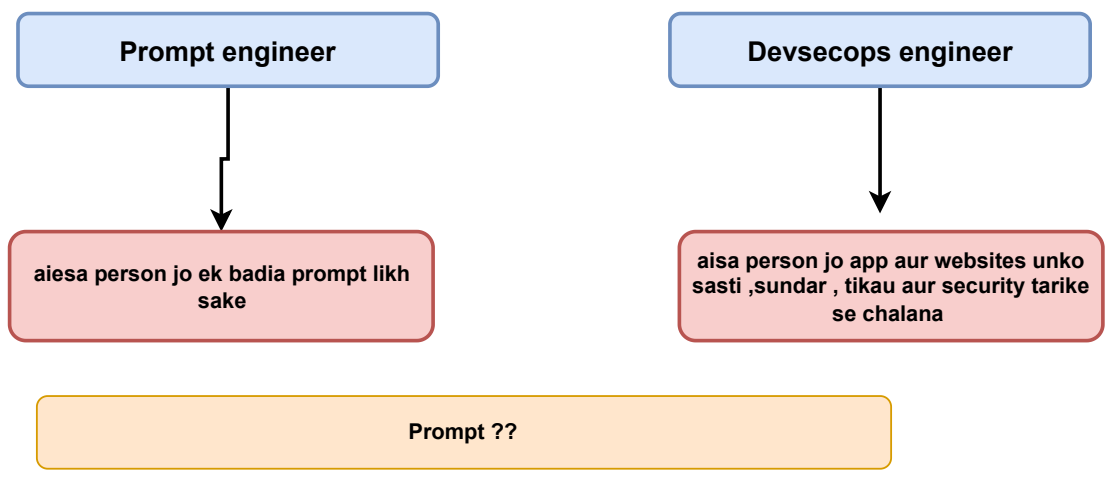

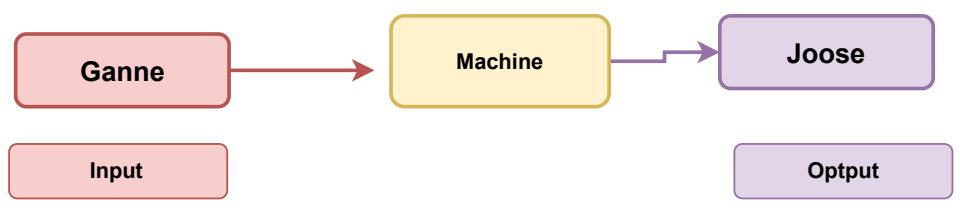

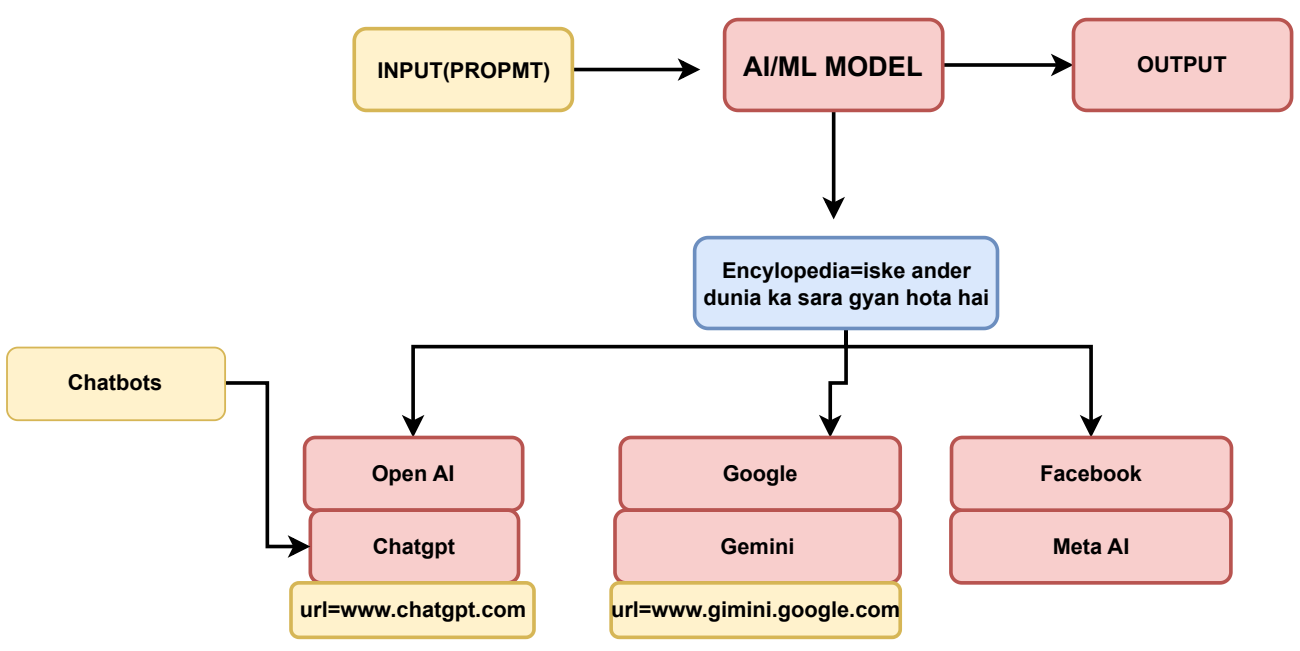

Linkedin

3 Tier architecture App

Diagram

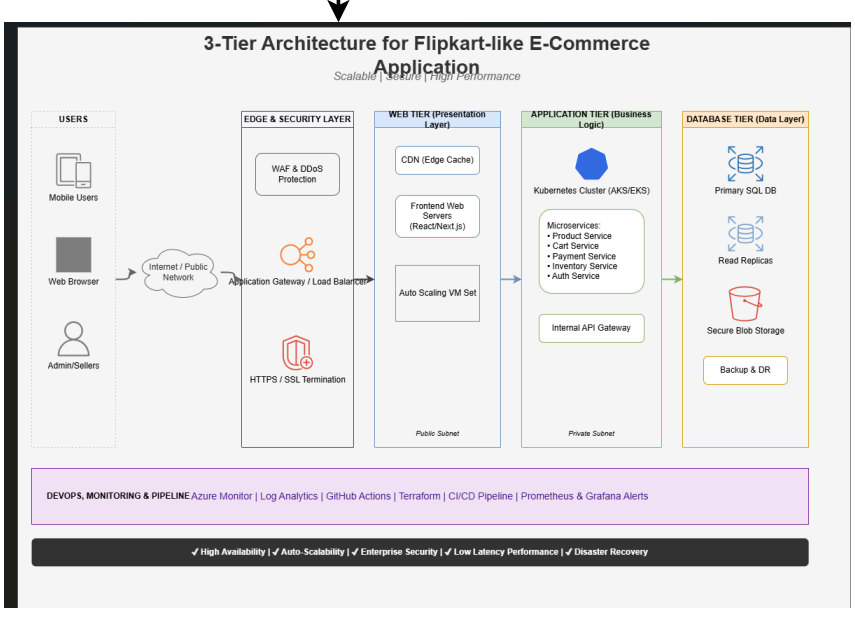

Content

🛒 Designed a Scalable 3-Tier Architecture for a Flipkart-like E-Commerce Application ☁️🚀

✅ Web Tier – Customer UI & Traffic Handling
✅ App Tier – Business Logic & APIs
✅ Database Tier – Orders, Users & Product Data

Focused on:
🔐 Security
⚡ High Availability
📈 Auto Scaling
🚀 Performance Optimization

Real-world production style architecture using Load Balancer, Secure Network & Database Isolation.

Building cloud infrastructure that can handle millions of users is the real game. 💡

#Azure #Flipkart #Ecommerce #3TierArchitecture #CloudComputing #DevOps #Terraform #CloudArchitecture #CloudEngineer #Tech #Infrastructure #Learning